Agora – meeting cubicles technical specification

.mdd

.mdd has a leading position among manufacturers of office furniture with many awards that prove quality and continuously increase demand for it`s products.
The realities of today`s market require constant quality improvement at all levels of modern organization. This applies in particular to customer service, marketing, quality of products and also to quality of processes within the company. Partnership relations among employees and with business partners form a base of economic growth and success of the company.
Constant investments in innovative machinery park, optimization of managment systems and an expansion of production halls allow to minimize the lead times for the product of the highest quality.

More than twenty years of experience in office furniture industry come with reference from a long list of companies and institutions to show their appreciation for an efficient and comprehensive service. .mdd is higly aware of the environment.
Being located in the forest region with lake by it1s side, .mdd takes the nature seriously and invests constantly in a modern and energy-efficient solutions to preserve the local life. Company puts emphasis on waste segregation and recycling. .mdd has been awarded for the exceptional care and involvement in waste disposal. All materials used are environmentally friendly and enjoy a high 95 % rate of being recycled.

General informations:

Warranty:
.mdd products - **5 years**.
Electrical components and fabric - **2 years**.

Certificate - MFC:

Assembly:
product delivered in separate elements

Packing:
foam wrap

Agora - meeting cubicles

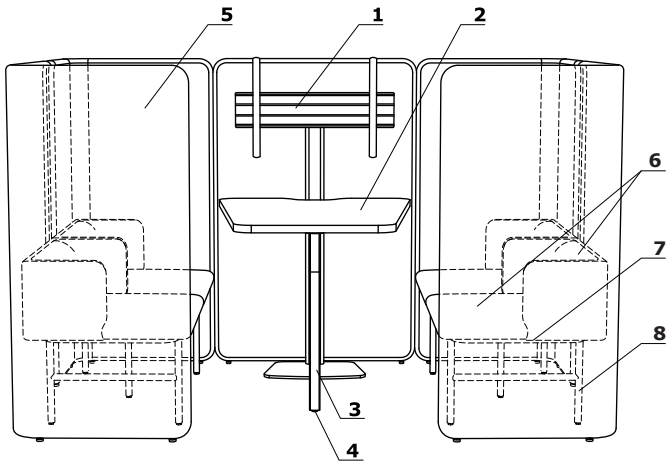

1. **TV stand -** steel, max size of 32-70", max weight 50 kg; equipped with cable cover
2. **Worktop -** MFC 28 mm, ABS edge
3. **Natural wood -** ash, with metal element, powder coated, coated with transparent varnish, profile 40 × 40 mm, spacer 10 mm between top and frame
4. **Leveling -** 10 mm range
5. **Screen -** wooden frame, upholstered
6. **Seat, backrest -** moulded foam, density of 52 kg/m3, upholstered
7. **Base** - Ø25 mm, wall thickness 1.5 mm, powder coated
8. **Legs -** finished with polypropylene feet in frame colour

Dimensions - meeting cubicles

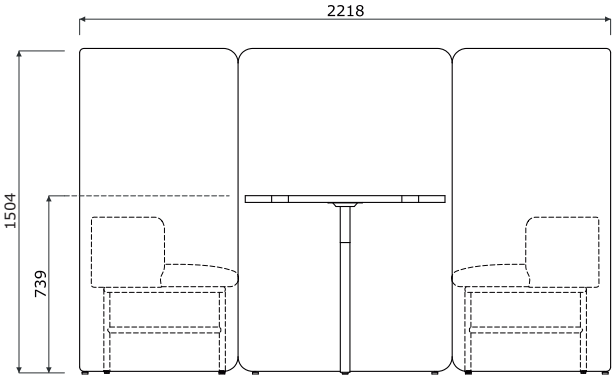

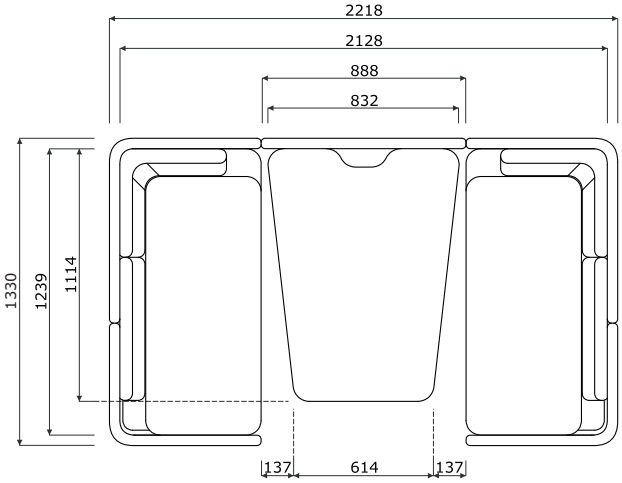

Dimensions - TV stand

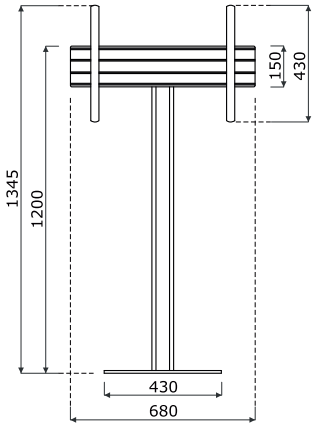

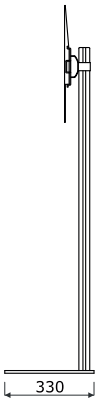

Agora - meeting cubicles *

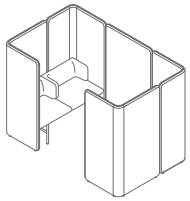

AR08B
2218 / 1330 / 1504
168.7 kg

* dimensions expressed in millimeters: width x depth x height

Seat, screen

Fabric Medley - second price group

M-68005 Dark olive

M-66008 Grey

M-64019 Red

M-63064 Pink

M-60999 Black

M-61189 Beige

M-60003 Light grey

M-62054 Mustard

M-62002 Yellow

M-66010 Blue

M-65011 Grey-violet

M-63017 Rusty

M-67006 Light blue

Technical data:

Material	polyester 100%
Fabric weight	510 g/lm (16.45 oz/lin.yd.)
Abrasion resistance rubs	BS EN ISO 12947-2, 75,000 cykli Martindale
Pilling resistance	scale 1-5, max. 5, EN ISO 12945-2 (4)
Colour fastness to light	scale 1-8, max. 8, EN ISO 105-B02 (5-7)
Colour fastness to rubbing	scale 1-5, max. 5, EN ISO 105x12 (wet/dry (4-5/4-5)
Acoustic test sound absorption	ISO 354
Flammability	BS EN 1021-1 (cigarette) BS 476 Part 7, Class 2 Class Uno UNI 9174 - UNI 8457 CA TB 117-2013 ASTM E 84 Class I

Fabric Atlantic * - second price group

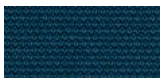
A-67043 Dark turquoise

A-67030 Aquamarine

A-60141 Light grey

A-60011 Grey

A-66064 Navy blue

A-65037 Violet

A-62048 Olive

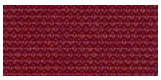
A-64089 Red

A-61078 Beige

A-60025 Graphite

Technical data:

Material	polyester 100%
Fabric weight	530 g/lm (17.09 oz/lin.yd.)
Abrasion resistance rubs	BS EN ISO 12947-2, 110,000 Martindale cycles
Pilling resistance	scale 1-5, max. 5, EN ISO 12945-2 (4-5)
Colour fastness to light	scale 1-8, max. 8, EN ISO 105-B02 (5-7)
Colour fastness to rubbing	scale 1-5, max. 5, EN ISO 105x12 (wet/dry
Flammability	CA TB 117-2013 ASTM E 84 Class I BS EN 1021-2 (match) BS EN 1021-1 (cigarette)

Fabric Vita - second price group

V-01 Light grey

V-02 Beige

V-03 Yellow

V-04 Grey

V-07 Dark grey

V-09 Olive

V-10 Grey-brown

V-11 Rusty

V-12 Black

V-13 Chocolate

V-18 Aquamarine

V-19 Blue

V-29 Dark green

Technical data:

Material	Surface: 98,5% PVC, 1,5% PU Substrate: 50% poliester, 50% Cotton
Fabric weight	850g/m2 ± 10% (1190G/lin. m ± 10%)
Abrasion resistance rubs	BS EN ISO 5470-2, 100,000 Martindale cycles
Colour fastness to light	6 (ISO 105 - B02)
Colour fastness to rubbing	wet: 4, dry: 4 (ISO 105 - X12)
Flammability	BS EN 1021 - (cigarette) BS EN 1021 - 2 (match) BS 5852 - (Ignition Source 5) BS 7176 - (Medium Hazard)
Flexes	BS EN ISO 7854 - Method B, 400.000 Flexing cycles
Anti-microblal / Anti-fungal	AATCC 147

***** There is a possibility of ordering the product in full colour spectrum of Atlantic range, as per Gabriel's pattern book, within 8 weeks

Fabric Charles * - second price group

C-01 Black
C-05 Grey
C-06 Beige
C-14 Brown
C-18 Rusty
C-21 Red
C-30 Pink
C-31 Marsala
C-32 Dark blue
C-35 Blue
C-41 Yellow
C-44 Olive
C-45 Green

Technical data:

Material	100% polyester
Fabric weight	433g/m2
Abrasion resistance rubs	90,000 Martindale cycles (EN ISO 12947-2)
Pilling resistance	EN ISO 12945-2, 5
Light fastness	EN ISO 105-B02, 5
Rubbing fastness	dry: 4-5, wet: 4-5,EN ISO 105x12
Flammability	EN 1021, 1

Fabric Mica - second price group

MC-01 Pink
MC-02 Red
MC-03 Dark red
MC-04 Navy blue
MC-05 Blue
MC-06 Aquamarine
MC-07 Bottle green
MC-08 Green
MC-09 Olive
MC-10 Light olive
MC-11 Mustard
MC-12 Yellow
MC-13 Beige
MC-14 Light grey
MC-15 Grey
MC-16 Graphite
MC-17 Light blue
MC-18 Mint
MC-19 Burgundy

Technical data:

Material	post-consumer recycled polyester 97%, polyester 3%
Fabric weight	305 g/lm
Abrasion resistance rubs	60,000 rubs martindale (EN ISO 12947-2)
Pilling resistance	scale 1-5, max. 5 - EN ISO 12945-2, 4-5
Light fastness	scale 1-8, max. 8 - EN ISO 105-B02, 5-8
Rubbing fastness	dry: 4-5, wet: 4-5, scale 1-5, max. 5 - EN ISO 105x12
Flammability	CA TB 117-2013 ASTM E 84 Class I BS EN 1021-1 Cigarette BS EN 1021-2 Match BS 476 Part 7 class I

*** Es besteht die Möglichkeit, das Produkt im vollen Farbspektrum von Charles laut dem Musterkatalog Dekoma innerhalb der Standardlieferzeit zu bestellen.**

Fabric Go Check - second price group

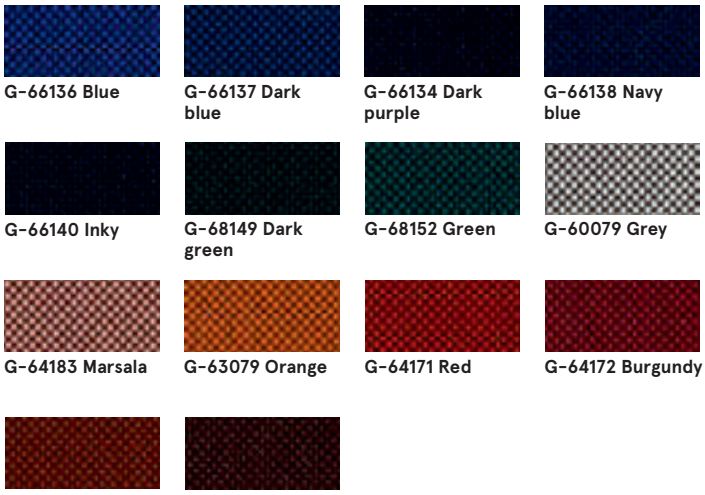

G-66136 Blue | G-66137 Dark blue | G-66134 Dark purple | G-66138 Navy blue
G-66140 Inky | G-68149 Dark green | G-68152 Green | G-60079 Grey
G-64183 Marsala | G-63079 Orange | G-64171 Red | G-64172 Burgundy
G-61144 Brown | G-61145 Dark brown

Technical data:

Material	100% Trevira CS
Fabric weight	435g/lm
Abrasion resistance rubs	80,000 rubs martindale (EN ISO 12947-2)
Pilling resistance	scale 1-5, max. 5 - EN ISO 12945-2, 5
Light fastness	scale 1-8, max. 8 - EN ISO 105-B02, 5-8
Rubbing fastness	dry: 4-5, wet: 4-5, scale 1-5, max. 5 - EN ISO 105x12
Flammability	BS EN 1021 1&2 Cigarette and Match BS EN 1021-1 Cigarette BS 5852 Crib 5 BS 7176 Medium hazard DIN 4102 - B1 NFP 92-503/504/505 M1 ÖNORM A3800-B1-B3825-Q1 UK Class Uno UNI 9175 Class 1 I EMME FAR/JAR 25.853 (a) (i) (ii) CA TB 117-2013 DIN EN 13501-1 B-s1,d0 AM 18 - NF D 60-013-(only for fabric)

Fabric Xtreme - third price group

XR026 Navy blue | XR009 Black | XR420 Olive | XR081 Dark grey
XR094 Grey | XR108 Beige | YS071 Light brown | YS030 Burgundy
YS076 Orange | YS072 Yellow | YS045 Green | YS100 Blue

Technical data:

Material	100% Trevira Clame (CS) 100% Recykling (YS) Flame Retardant polyester. Non metallic dyestuffs.
Fabric weight	310 g/m2 ±5% (435g/lin.m ±5%)
Abrasion resistance rubs	60,000 Martindale cycles (CS) 100,000 Martindale cycles (YS)
Colour fastness to light	6 (ISO 105 - B02)
Colour fastness to rubbing	wet: 4, dry: 4 (ISO 105 - X12)
Flammability	EN 1021 - 1 (cigarette), EN 1021 - 2 (match) BS 7176 Low Hazard, NF P92-507 M1, DIN 4102 B1, UNI 9175 Class 1 IM, UNI 8456, UNI 9174 & UNI 9177 Classe Uno, ÖNORM B 3825 & A 3800-1 NF D 60-013

Fabric Synergy - third price group

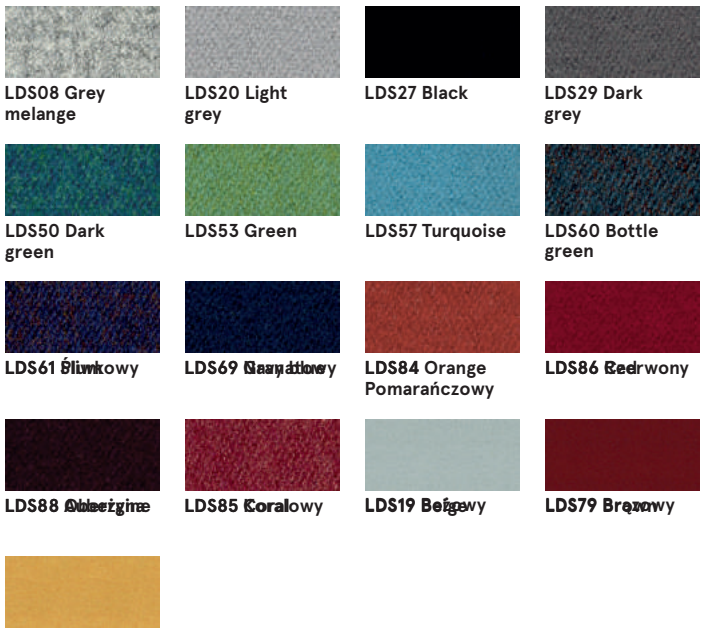

LDS08 Grey melange | LDS20 Light grey | LDS27 Black | LDS29 Dark grey
LDS50 Dark green | LDS53 Green | LDS57 Turquoise | LDS60 Bottle green
LDS61 Śliwkowy | LDS69 Granatowy | LDS84 Orange Pomarańczowy | LDS86 Czerwony
LDS88 Oliwkowy | LDS85 Koralowy | LDS19 Beżowy | LDS79 Brązowy
LDS44 Yellow

Technical data:

Material	95% Virgin Wool, 5% Poliamid
Fabric weight	400g/m2 ±5% (560 g/lin.m ±5%)
Abrasion resistance rubs	Independently certified ≥100,000 Martindale cycles
Colour fastness to light	5 (ISO 105 - B02)
Colour fastness to rubbing	ISO 105 - X12 - wet: 4, dry: 4
Flammability	EN 1021 - 1 (cigarette, EN 1021 - 2 (match), BS 7176 Low Hazard, UNI 9175 Classe 1 IM, ÖNORM B 3825 & A 3800-1

Fabric Silvertex - third price group

There is a possibility of ordering the product in full colour spectrum of Silvertex range, as per Spradling's pattern book, within 15 working days.

Technical data:

Material	Topcoat: 100% Vinyl Backing: 100% Polyesterr Hi-Loft ZTM
Fabric weight	685 gr/m2
Abrasion resistance	>300,000 cycles Martindale
UV-resistance	>= 7 (1000 hours, blue wool scale)
Cold Crack resistance	-23°C
Flame retardancy	NF P 92-503 / M2 EN 1021, Part 1&2 DIN 4102 B2 ÖNORM B 3825, Gruppe I - Schwerbrennbares Verhalten ÖNORM A 3800, Teil I, Qualmbildungsklasse QI - schwachqualmend IMO Res. MSC.307 (88) (2010 FTP Code) Annex I Part 8 (MED) Marine Equipment Directive in its current valid version UNI 91 75 (1987) / UNI 9175/FAI (1994) Classe I.IM (uno I EMME) UNE 23.727-90 IR /M2 EN 71-2: 2006+AI: 2007 Safety of Toys - Part 2: Flammability ECE R I I 8 (replaces Directiveę 95/28/EC) FMVSS 302 FAR 25/853
Antimicrobial	Antifungal Protection, Antibacterial Protection, Antimycotic Protection

Fabric Atlas - fourth price group

AS-531 Orange

AS-501 Pink

AS-651 Red

AS-681 Burgundy

AS-391 Brown

AS-781 Navy blue

AS-161 Dark grey

AS-111 Light grey

AS-971 Light green

AS-981 Dark green

Technical data:

Material	90% new wool, 10% nylon
Fabric weight	286g/m2, 400g/lm
Abrasion resistance rubs	100,000 cykli Martindale, EN ISO 12947
Colour fastness to light	ISO 105 B02: 6-7
Colour fastness to rubbing	ISO 105-X12:2001, (wet/dry) 4-5/4-5
Flammability	BS EN 1021-2 Match,BS EN 1021-1 Cigarette, BS 5 5852 Crib 5, BS 5852 ignition source 3, BS 5852 Part 1, NF D 60 013, UNI 9175 1IM, US Cal. Bull. 117-2013

Fabric Field2 - fourth price group

FD-463 Yellow

FD-963 Green

FD-123 Beige

FD-132 Grey

FD-142 Graphite

FD-662 Red

FD-673 Blue-red

FD-782 Navy blue

FD-693 Burgundy

FD-192 Black

Technical data:

Material	100% Trevira CS
Fabric weight	321g/m2, 450g/lm
Abrasion resistance rubs	100,000 cykli Martindale, EN ISO 12947
Colour fastness to light	ISO 105 B02: 5-7
Flammability	BS EN 1021-2 Match,BS EN 1021-1 Cigarette, BS 5 5852 Crib 5, DIN 4102 B1 FAR 25.853, UNI 9177 classe 1, US Cal. Bull. 117-2013

Leather - fourth price group

L01 Black

L02 Dark green

L03 Navy blue

L04 Light brown

L05 Dark brown

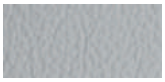
L06 Grey

L07 Beige

Technical data:

Material	Leather type - corrected grain leather Type of finishing - pigmented leather
Abrasion resistance rubs	Dry: 500 cycles - min. 4 grey scale Wet: 250 cycles - min. 4 grey scale UNI EN ISO 11640
Colour fastness to light	Light fastness: min. 4 grey scale, UNI ISO 105-802
Flammability	No ignition UNI EN 1021-1-2006 BS EN 1021-1-2006

Base

M016 Pearl white
semi-matt RAL1013

M115 Black
semi-matt RAL9005

Top

08 Black

26 Aluminum
satinato

31 Canadian oak

39 Polar birch

64 Cocoa

67 White pastel

106 Lowland
walnut

154 Anthracite

167 Grey oak

168 Natural oak

169 Honey oak

170 Acacja

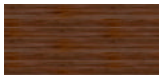
171 Dark walnut

Metal element

M009 Aluminum
semi-matt
RAL9006

M015 White
semi-matt
RAL9010

M154 Antracite
semi-matt
RAL7043

M115 Black
semi-matt
RAL9005

Base - wooden leg

Natural ash *

* the colour of desk legs may differ depending on natural wood ring pattern

.mdd

TV stand

Black

www.mdd.eu

Omega Ekspress SIA
LV40003402577
Biroja adrese: Lāčplēša 125, LV-1003, Rīga
www.city-office.lv
info@city-office.lv